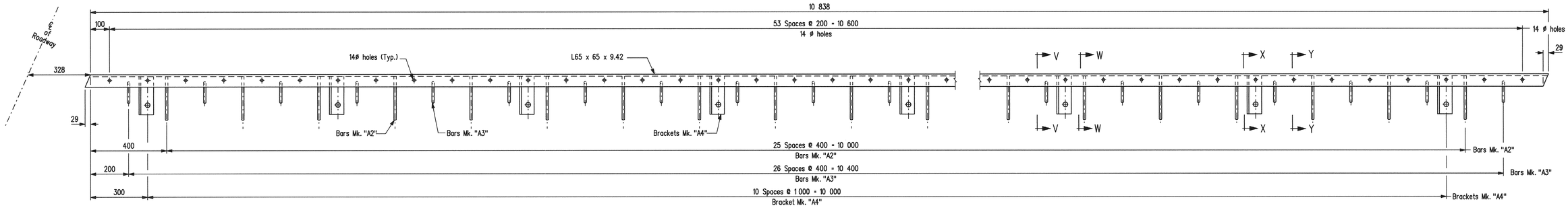

EDGE ANGLE MK."E1"

Placed at North Approach slab

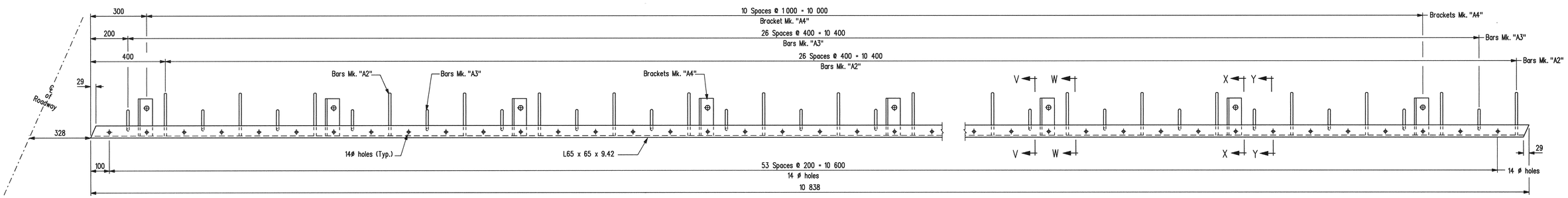

EDGE ANGLE MK."E2"

Placed at South Approach slab

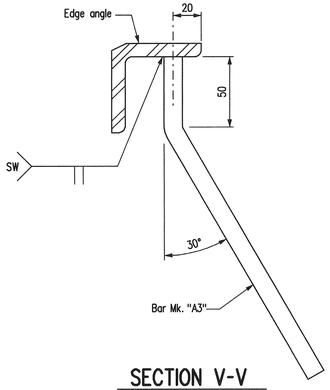

SECTION V-V

Scale 1:2

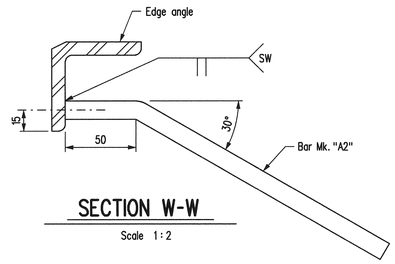

SECTION W-W

Scale 1:2

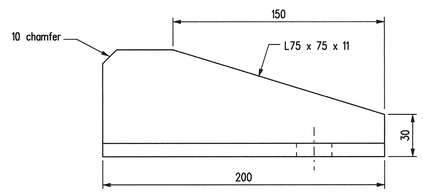

ELEVATION

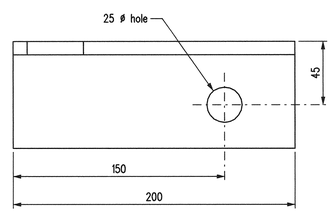

PLAN

BRACKET MK."A4"

Scale 1:2

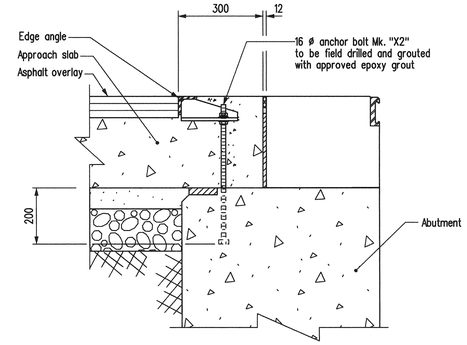

TYPICAL SECTION

Showing approach slab edge angle erection details. Typical for Stages 1 & 2
Scale 1:10

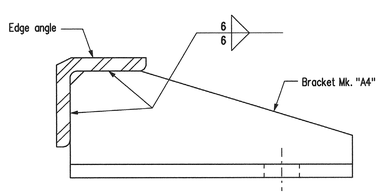

SECTION X-X

Scale 1:2

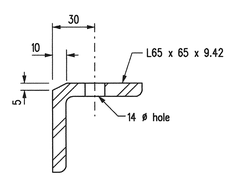

SECTION Y-Y

Scale 1:2

REVISIONS		
DATE	BY	DESCRIPTION

PROVINCE OF MANITOBA
mar 15/10
S.S
RIHAL
REGISTERED PROFESSIONAL ENGINEER

APPROACH SLAB - STAGE 1 - DETAILS

RECONSTRUCTION AND STRENGTHENING OF EXISTING BRIDGE
OVER ASSINIBOINE RIVER - CONTRACT THREE
ON P.T.H. No. 100 IN R.L.'S 72, 73 & 94
PARISH OF ST. CHARLES

CITY OF WINNIPEG

Manitoba
Infrastructure and Transportation
Water Control & Structures

RELEASED FOR CONSTRUCTION
BY:
Ruth Hayden March 15/10
DIRECTOR DATE
STRUCTURES DESIGN AND CONSTRUCTION BRANCH

DESIGN	BY: M.B.C.	SCALE: 1:10 or	SHEET No. 126
	CHECKED: S.S.R.		
DETAILS	BY: G.S.	as shown	SITE No. 2924-00
	CHECKED: S.S.R./J.J.		

...\292400_Approach Slab.dgn 2010-03-15 4:00:18 AM