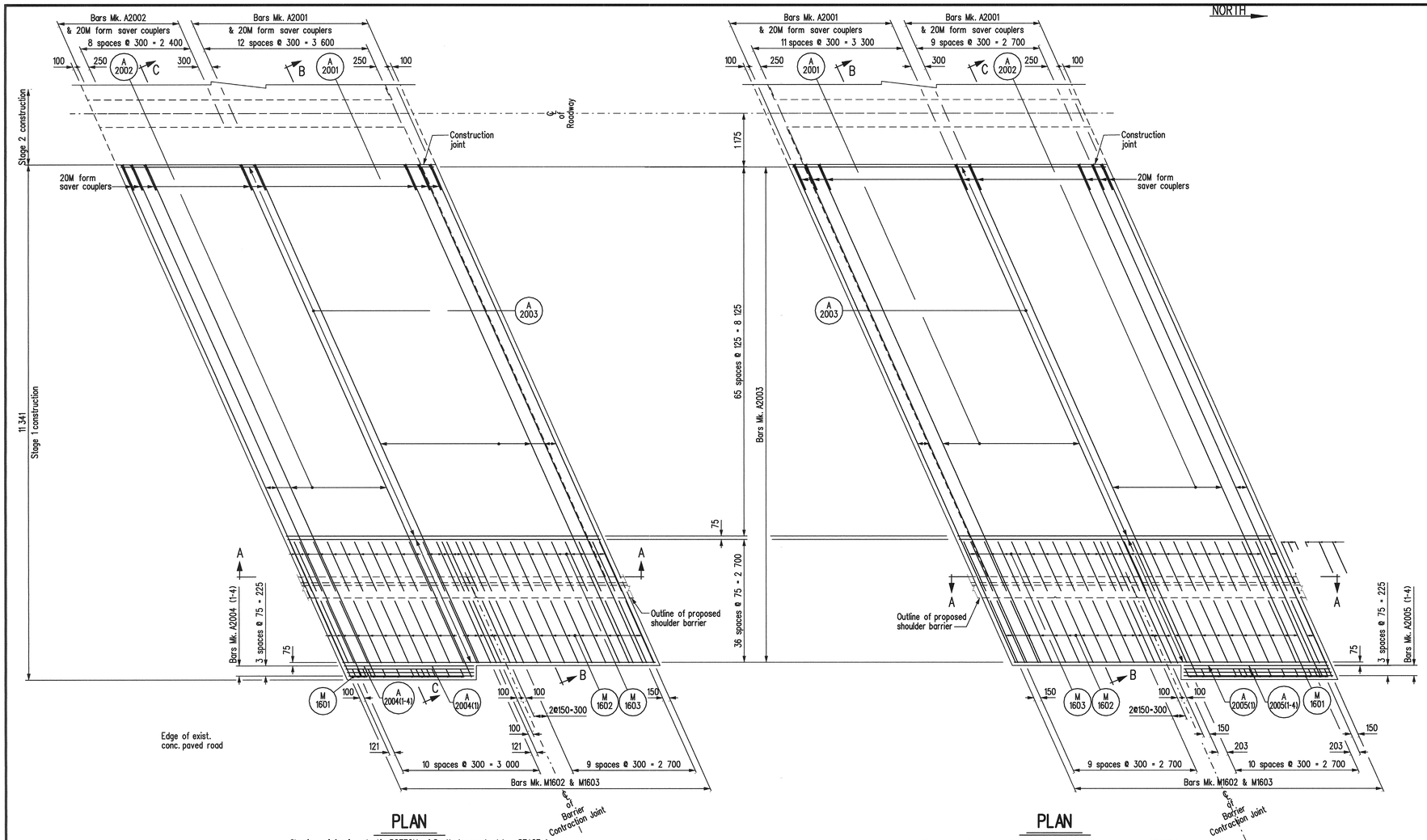

PLAN

Showing reinforcing steel in BOTTOM of South Approach slab - STAGE 1.
For layout of bars Mk. 1501 see Part Plan "S"

PLAN

Showing reinforcing steel in BOTTOM of North Approach slab - STAGE 1.
For layout of bars Mk. 1501 see Part Plan "N"

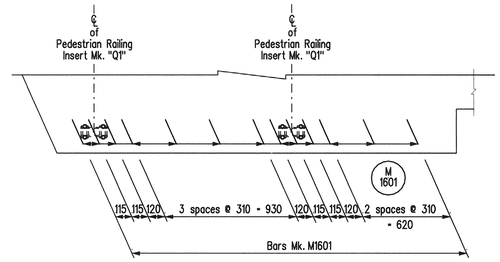

PART PLAN

Showing bars in BOTTOM of South Approach slab S.E. corner - STAGE 1
Scale 1:20

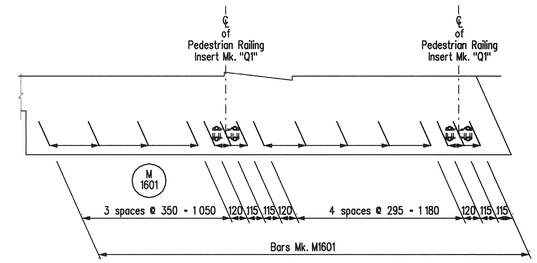

PART PLAN

Showing bars in BOTTOM of South Approach slab S.E. corner - STAGE 1
Scale 1:20

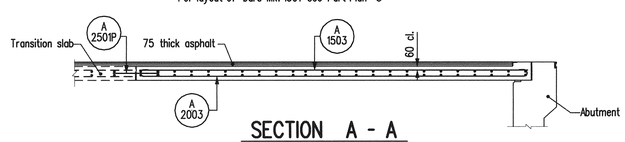

SECTION A - A

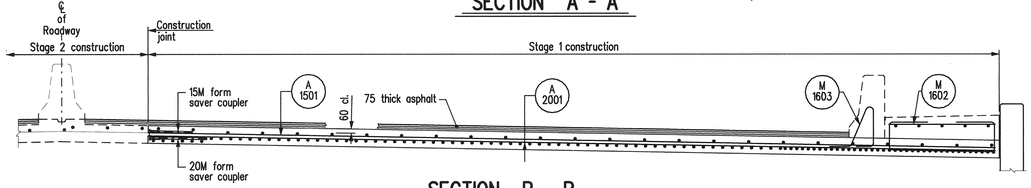

SECTION B - B

Scale 1:40

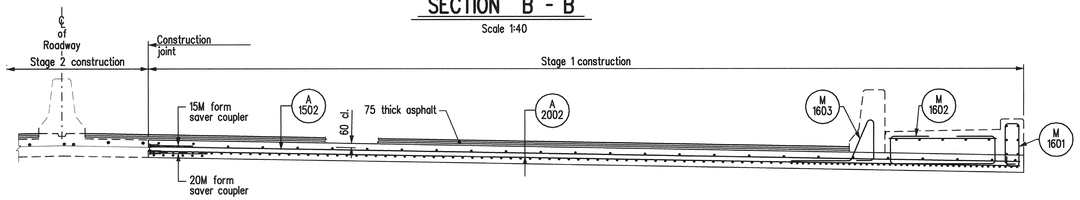

SECTION C - C

Scale 1:40

NOTES:

1. Rebar Form Savers shall be Erico Lenton Form Saver splicing system or equivalent as approved by the Engineer.
2. Rebar Couplers shall be Erico Lenton Lock mechanical rebar splicing system or equivalent as approved by the Engineer. The couplers shall develop the full yield strength in tension of the coupled bars.
3. Concrete cover shall be 60 mm unless noted otherwise.

MINIMUM LAP SPLICES

STEEL BARS	MMFX - 2 BARS
15M - 560 mm	13M - 700 mm
20M - 680 mm	16M - 850 mm
25M - 860 mm	19M - 1000 mm
	22M - 1200 mm

NOTE:

13M etc. indicates MMFX - 2 reinforcing bars metric size.

REVISIONS		
DATE	BY	DESCRIPTION

PROVINCE OF MANITOBA
March 15/10
S.S RIHAL
REGISTERED PROFESSIONAL ENGINEER

APPROACH SLABS - STAGE 1 - REINFORCING DETAILS

RECONSTRUCTION AND STRENGTHENING OF EXISTING BRIDGE
OVER ASSINIBOINE RIVER - CONTRACT THREE
ON P.T.H. No. 100 IN R.L.'S 72, 73 & 94
PARISH OF ST. CHARLES

CITY OF WINNIPEG

Manitoba
Infrastructure and Transportation
Water Control & Structures

RELEASED FOR CONSTRUCTION BY:
Ruth Eden March 15/10
DIRECTOR DATE
STRUCTURES DESIGN AND CONSTRUCTION BRANCH

DESIGN	BY: M.B.C.	
	CHECKED: S.S.R.	
DETAILS	BY: G.S. & K.P.	
	CHECKED: S.S.R./J.J.	

SCALE: 1 : 50 or as shown
SHEET No. 130
SITE No. 2924-00

...\292400_Approach Slab.dgn 2010-03-15 9:45:01 AM