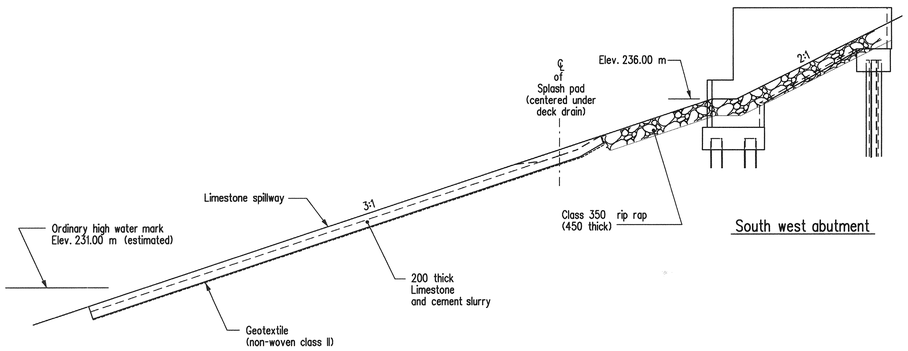

ELEVATION OF SOUTH WEST UNDER BRIDGE SLOPE DRAINAGE

South east elevation similar
Scale 1:75

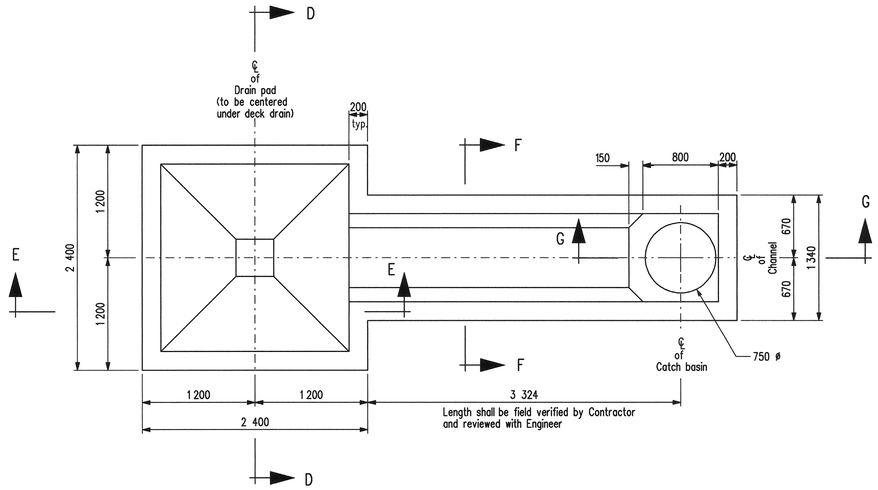

PLAN

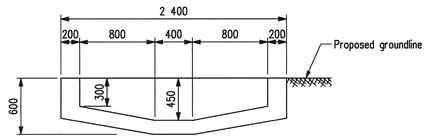

SECTION D-D

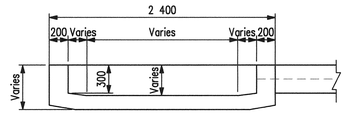

SECTION E-E

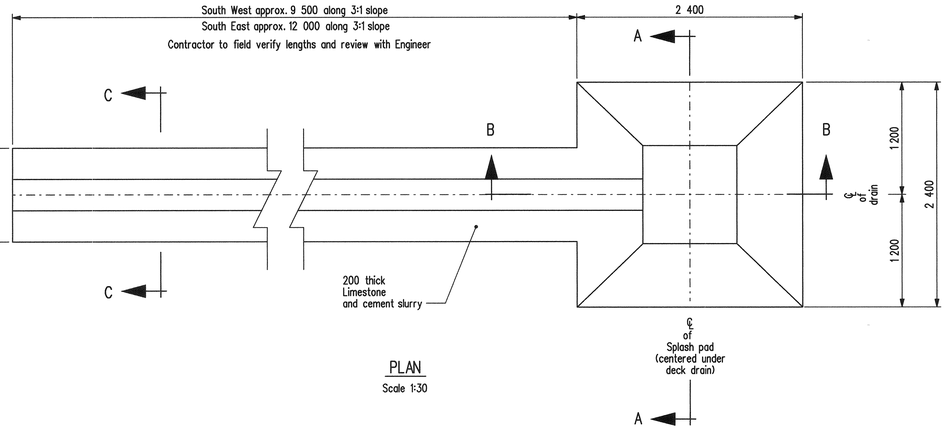

PLAN
Scale 1:30

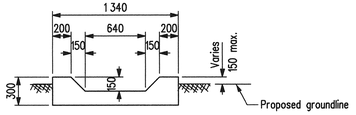

SECTION F-F

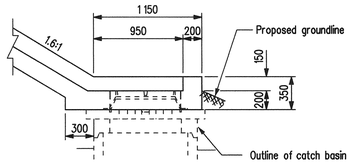

SECTION G-G

DRAIN PAD

For North under bridge slope drainage
Scale 1:30

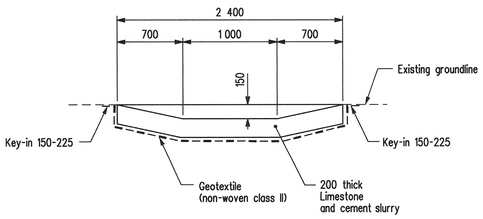

SECTION A-A
Scale 1:30

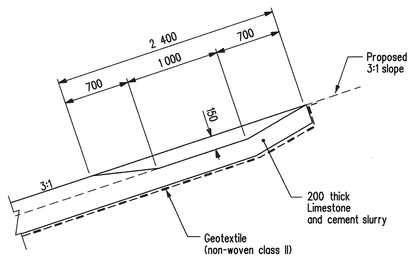

SECTION B-B
Scale 1:30

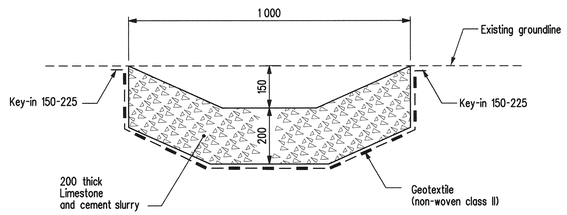

SECTION C-C
Limestone spillway
Scale 1:10

SPLASH PAD AND LIMESTONE SPILLWAY DETAILS

For South under bridge slope drainage

REVISIONS		
DATE	BY	DESCRIPTION

PROVINCE OF MANITOBA
March 15/10
S.S. RIHAL
REGISTERED PROFESSIONAL ENGINEER

UNDER BRIDGE SLOPE DRAINAGE DETAILS

RECONSTRUCTION AND STRENGTHENING OF EXISTING BRIDGE
OVER ASSINIBOINE RIVER - CONTRACT THREE
ON P.T.H. No. 100 IN R.L.'S 72, 73 & 94
PARISH OF ST. CHARLES

CITY OF WINNIPEG

Manitoba
Infrastructure and Transportation
Water Control & Structures

RELEASED FOR CONSTRUCTION BY:
Ruth Soden March 15/10
DIRECTOR DATE
STRUCTURES DESIGN AND CONSTRUCTION BRANCH

DESIGN	BY: M.B.C.	
	CHECKED: S.S.R.	
DETAILS	BY: N.J.	
	CHECKED: S.S.R./J.J.	

SCALE: As Shown
SHEET No. 118
SITE No. 2924-00

...\292400_Catch basins and concrete pipe.dgn 2010-03-12 3:34:56 PM