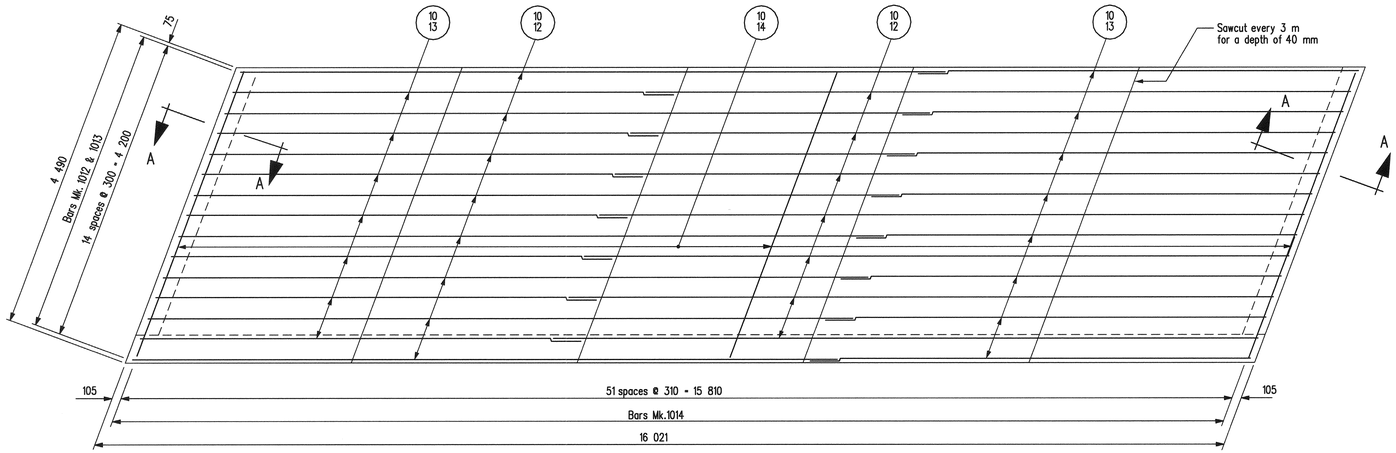

PLAN

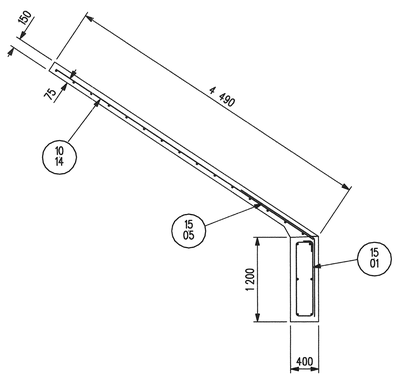

TYPICAL SECTION

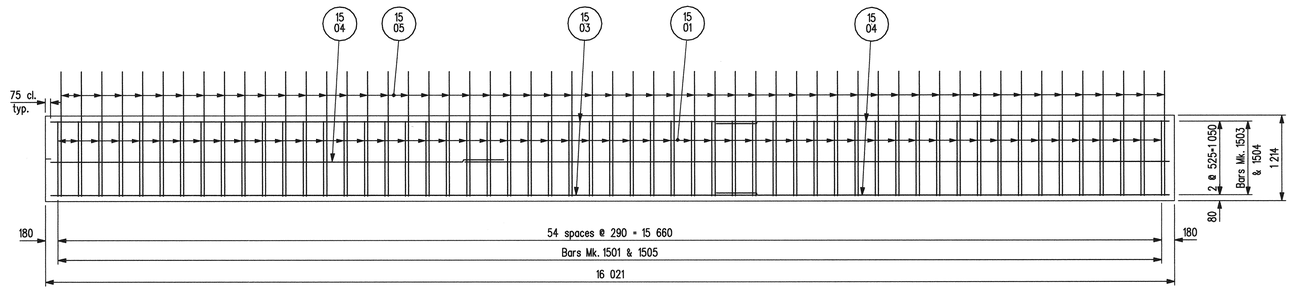

ELEVATION

NOTES:

1. Exterior dimensions will be finalized by the Engineer to suit field conditions with maximum dimensions shown.
2. Reinforcing bars shall be cut and bent as required to suit field verified dimensions.
2 Concrete cover shall be 75 clearance unless noted otherwise.
3. Minimum lap length 15M bars = 550
   10M bars = 390
4. For Bill of Reinforcing see sheet No.119

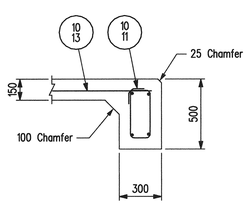

SECTION A-A
Scale 1:20

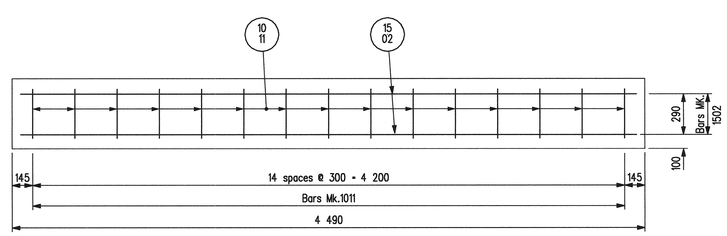

END ELEVATION
Scale 1:20

CONCRETE AND REINFORCING SLOPE PROTECTION DETAILS

REVISIONS		
DATE	BY	DESCRIPTION

PROVINCE OF MANITOBA
Mar 15/10
S.S RIHAL
REGISTERED PROFESSIONAL ENGINEER

CONCRETE SLOPE PROTECTION REINFORCING DETAILS

RECONSTRUCTION AND STRENGTHENING OF EXISTING BRIDGE
OVER ASSINIBOINE RIVER - CONTRACT THREE
ON P.T.H. No. 100 IN R.L.'S 72, 73 & 94
PARISH OF ST. CHARLES

CITY OF WINNIPEG

Manitoba
Infrastructure and Transportation
Water Control & Structures

RELEASED FOR CONSTRUCTION BY:
Ruth Eden March 15/10
DIRECTOR DATE
STRUCTURES DESIGN AND CONSTRUCTION BRANCH

DESIGN	BY: M.B.C.	SCALE: 1:40 or As Shown	SHEET No. 120
	CHECKED: S.S.R.		
DETAILS	BY: N.J.		SITE No. 2924-00
	CHECKED: S.S.R./J.J.		

...\292400_Catch basins and concrete pipe.dgn 2010-03-12 3:36:06 PM