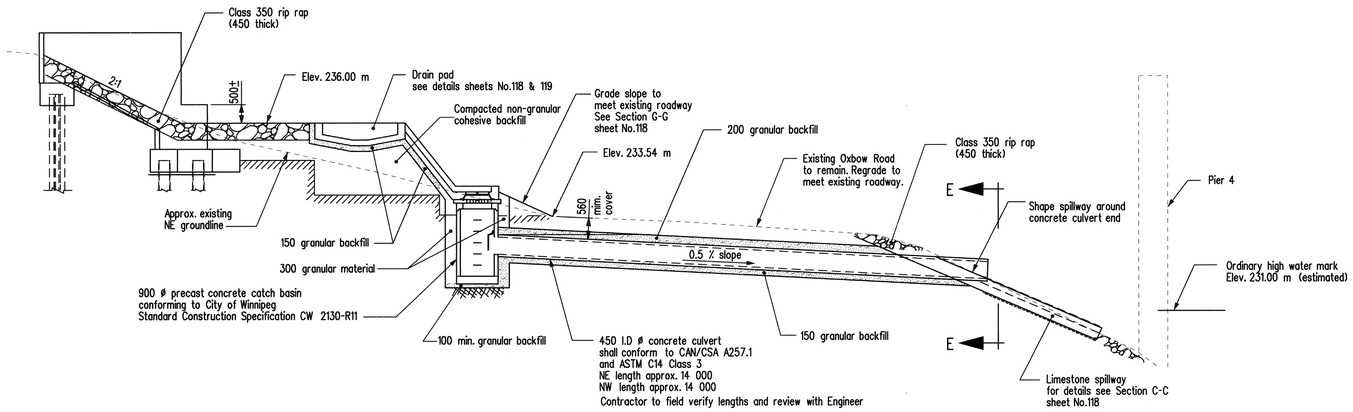

NORTH EAST UNDER BRIDGE SLOPE DRAINAGE SECTION

North West under bridge slope drainage similar

Scale 1:75

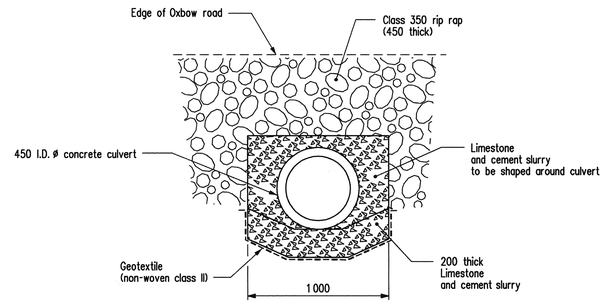

SECTION E-E

For details of limstone spillway see Section C-C sheet No.118

Scale 1:20

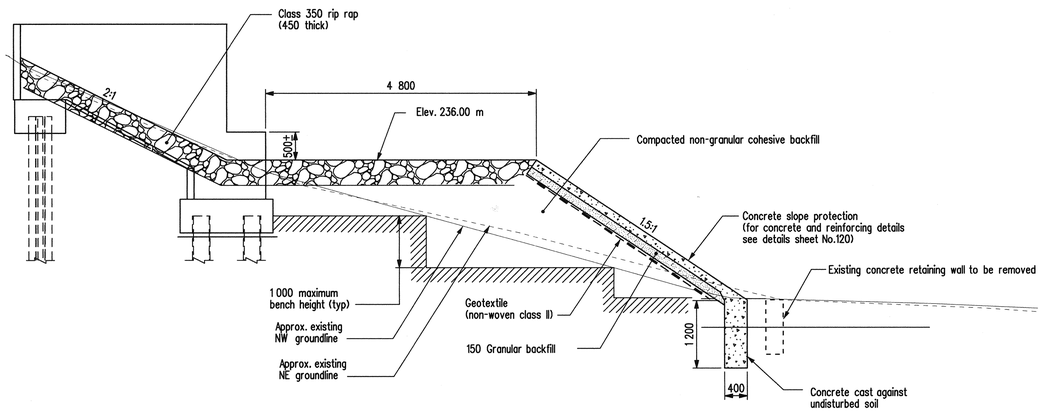

CONCRETE SLOPE PROTECTION SECTION

Perpendicular to roadway

Scale 1:50

Note :
Benches are to be excavated one level at a time and the compacted backfill brought up before the next benching level is excavated.

REVISIONS		
DATE	BY	DESCRIPTION

PROVINCE OF MANITOBA
MAR 15/10
S.S
RIHAL
REGISTERED PROFESSIONAL ENGINEER

UNDER BRIDGE SLOPE DRAINAGE DETAILS

RECONSTRUCTION AND STRENGTHENING OF EXISTING BRIDGE
OVER ASSINIBOINE RIVER - CONTRACT THREE
ON P.T.H. No. 100 IN R.L.'S 72, 73 & 94
PARISH OF ST. CHARLES

CITY OF WINNIPEG

Manitoba
Infrastructure and Transportation
Water Control & Structures

RELEASED FOR CONSTRUCTION
BY: Ruth Joden March 15/10
DIRECTOR / DATE
STRUCTURES DESIGN AND CONSTRUCTION BRANCH

DESIGN	BY: M.B.C.	SCALE: As Shown
	CHECKED: S.S.R.	SHEET No. 117
DETAILS	BY: N.J.	
	CHECKED: S.S.R./J.J.	SITE No. 2924-00

...\292400_Catch basins and concrete pipe.dgn 2010-03-12 3:34:35 PM