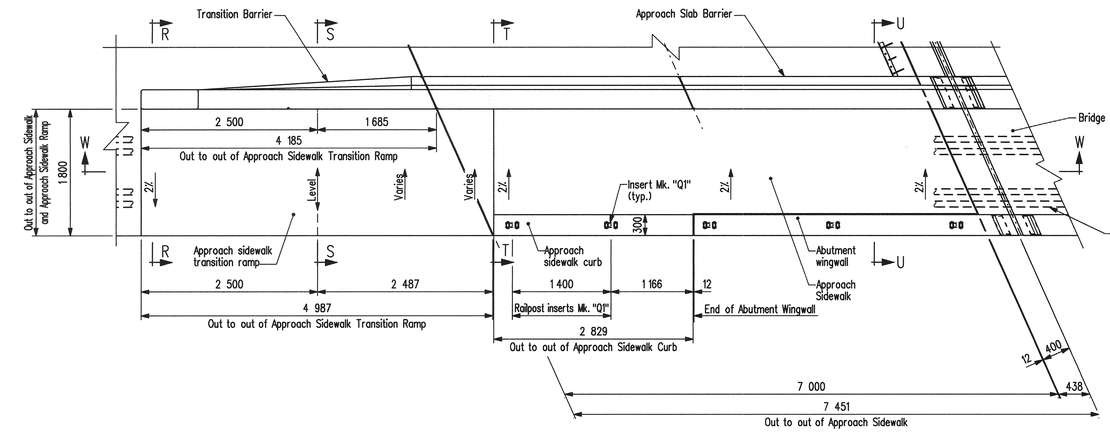

PART PLAN

Showing South Approach Sidewalk and South Approach Sidewalk Ramp

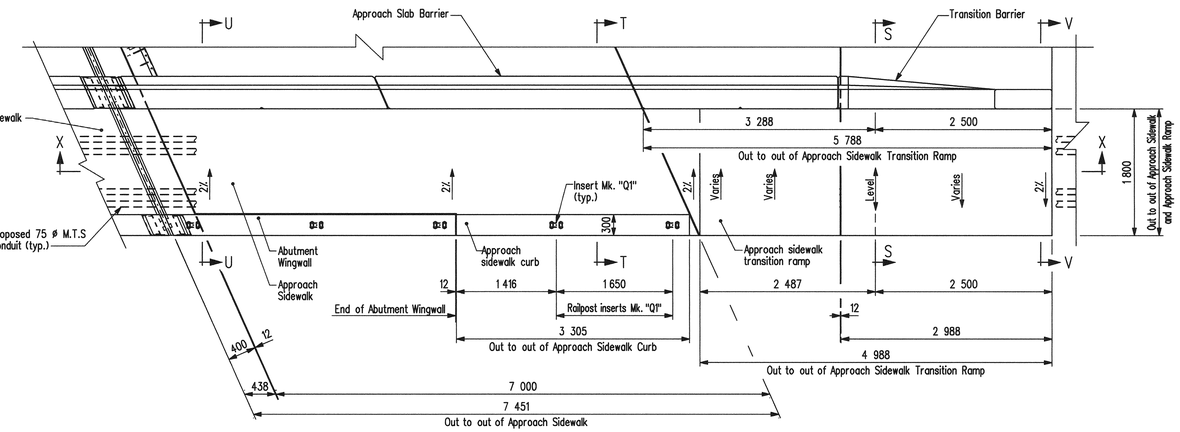

PART PLAN

Showing North Approach Sidewalk and North Approach Sidewalk Ramp

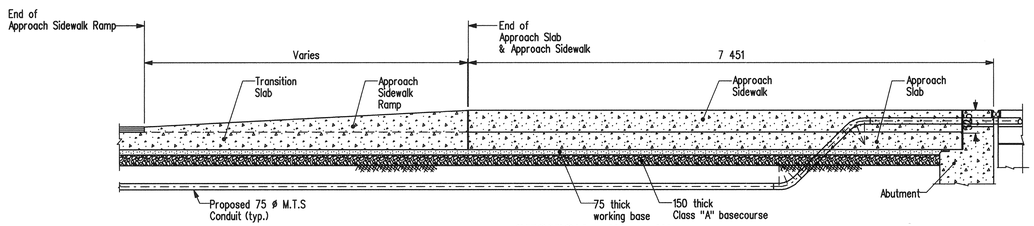

SECTION W - W

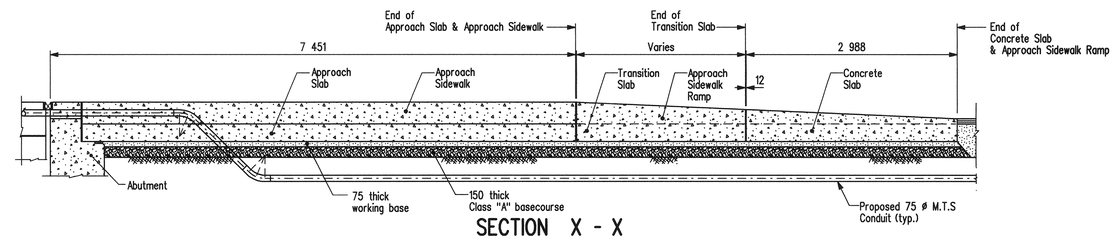

SECTION X - X

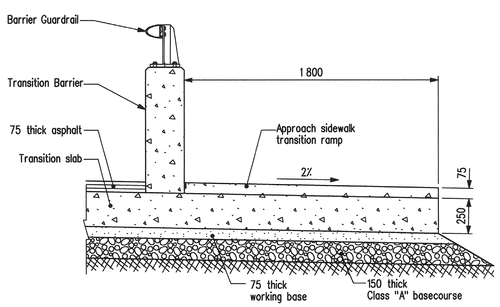

SECTION R - R

Approach guardrailing not shown for clarity
Scale 1 : 20

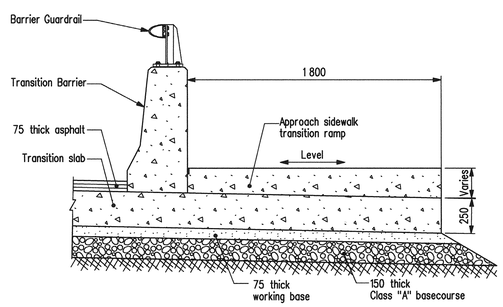

SECTION S - S

Scale 1 : 20

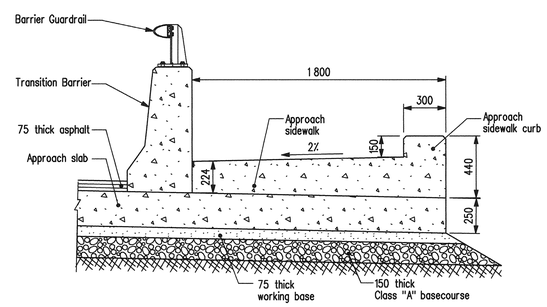

SECTION T - T

Scale 1 : 20

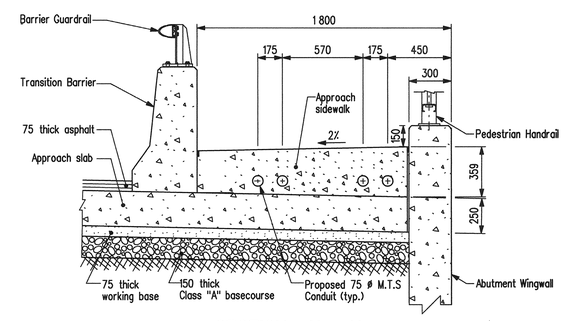

SECTION U - U

Scale 1 : 20

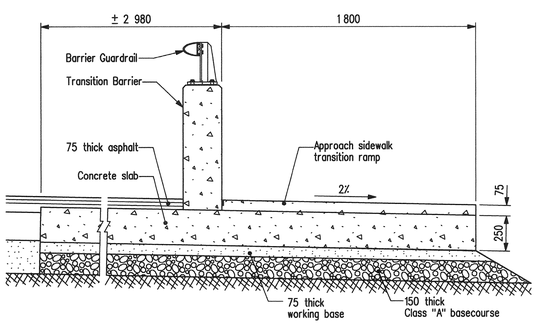

SECTION V - V

Approach guardrailing not shown for clarity
Scale 1 : 20

REVISIONS		
DATE	BY	DESCRIPTION

PROVINCE OF MANITOBA
Mar. 15/10
S.S RIHAL
REGISTERED PROFESSIONAL ENGINEER

APPROACH SIDEWALK - STAGE 1 - CONCRETE DETAILS

RECONSTRUCTION AND STRENGTHENING OF EXISTING BRIDGE
OVER ASSINIBOINE RIVER - CONTRACT THREE
ON P.T.H. No. 100 IN R.L.'S 72, 73 & 94
PARISH OF ST. CHARLES

CITY OF WINNIPEG

Manitoba
Infrastructure and Transportation
Water Control & Structures

RELEASED FOR CONSTRUCTION BY:
Ruth Foden March 15/10
DIRECTOR — DATE
STRUCTURES DESIGN AND CONSTRUCTION BRANCH

DESIGN	BY: M.B.C.	SCALE: 1 : 40 or as shown	SHEET No. 125
	CHECKED: S.S.R.		
DETAILS	BY: G.S.		SITE No. 2924-00
	CHECKED: S.S.R./J.J.		

...\292400_Approach Slab.dgn 2010-03-15 3:59:56 AM