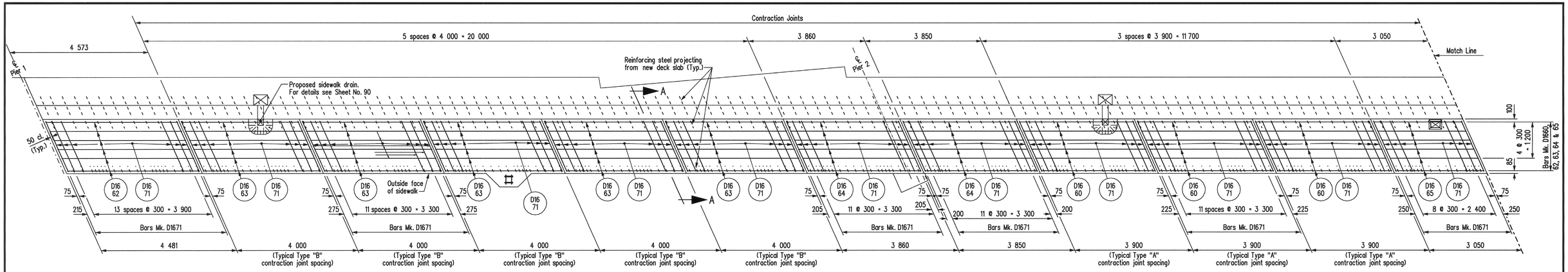

PLAN OF SIDEWALK

Showing reinforcing steel in sidewalk,
Stage 1
Pier 1 to Pier 4.

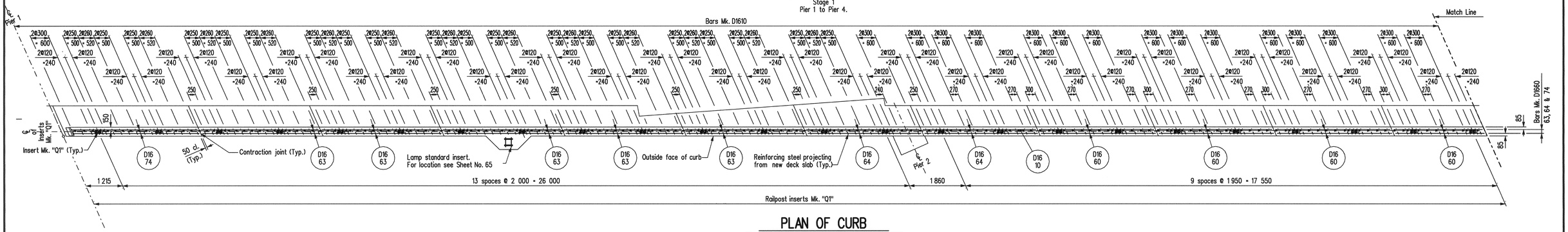

PLAN OF CURB

Showing reinforcing steel in curb,
Stage 1
Pier 1 to Pier 4.
Scale 1 : 60

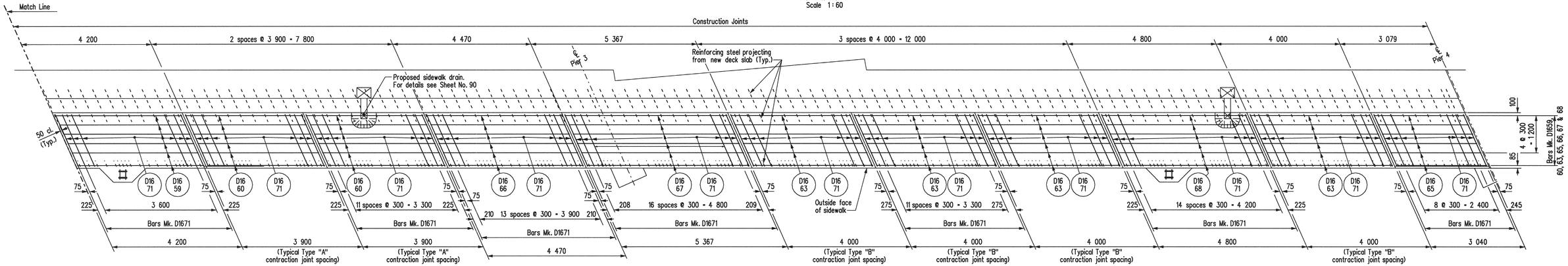

PLAN OF SIDEWALK

Showing reinforcing steel in sidewalk,
Stage 1
Pier 1 to Pier 4.

NOTES:

1. 60 cl. cover to reinforcing unless noted otherwise.
2. Bars may be shifted slightly or cut as required, subject to Engineer's approval, to clear new sidewalk drains.
3. For SECTION A-A see Sheet No. 74
4. For BILL OF REINFORCING STEEL see Sheets No. 78 & 79

REVISIONS		
DATE	BY	DESCRIPTION

PROVINCE OF MANITOBA
MAR 15/10
S.S RIHAL
REGISTERED PROFESSIONAL ENGINEER

CURB AND SIDEWALK REPLACEMENT - STAGE 1
REINFORCING DETAILS

RECONSTRUCTION AND STRENGTHENING OF EXISTING BRIDGE
OVER ASSINIBOINE RIVER - CONTRACT THREE
ON P.T.H. No. 100 IN R.L.'S 72, 73 & 94
PARISH OF ST. CHARLES

CITY OF WINNIPEG

Manitoba
Infrastructure and Transportation
Water Control & Structures

RELEASED FOR CONSTRUCTION BY:
Ruth Eden March 15/10
DIRECTOR — DATE
STRUCTURES DESIGN AND CONSTRUCTION BRANCH

DESIGN	BY: M.B.C.	SCALE: 1 : 40	SHEET No. 77
	CHECKED: S.S.R.		
DETAILS	BY: D.P.W.		SITE No. 2924-00
	CHECKED: S.S.R./J.J.		

...\292400_Deck Reinforcing_Contract 3.dgn 2010-03-10 9:56:25 AM