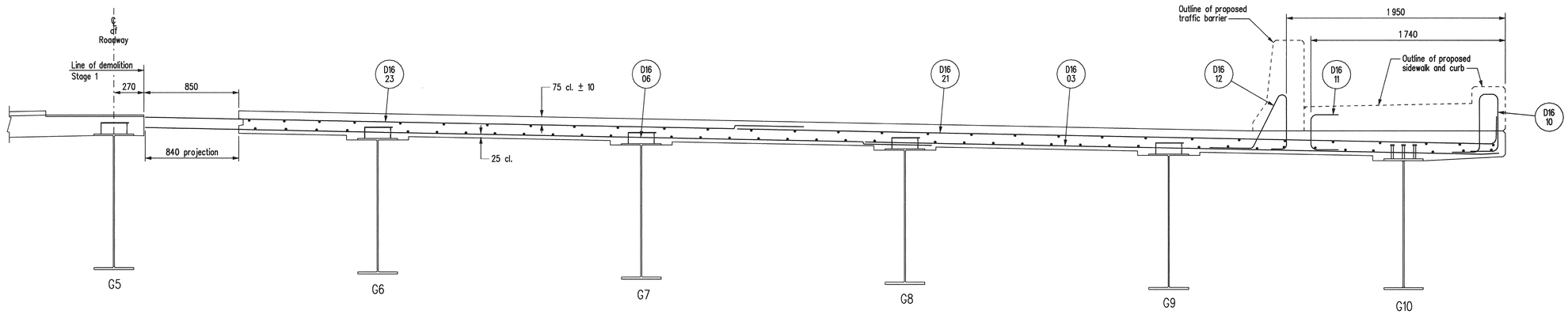

SECTION A-A

Scale 1 : 20

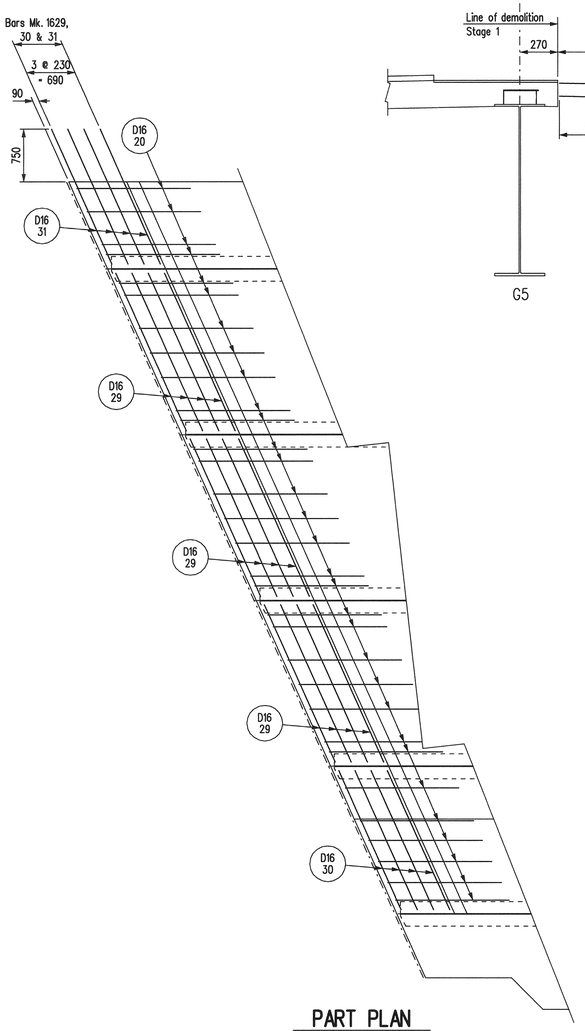

PART PLAN

Showing additional transverse reinforcing bars located in bottom of haunch at end of spans. Deck haunch at South abutment shown. All others similar.
Scale 1 : 40

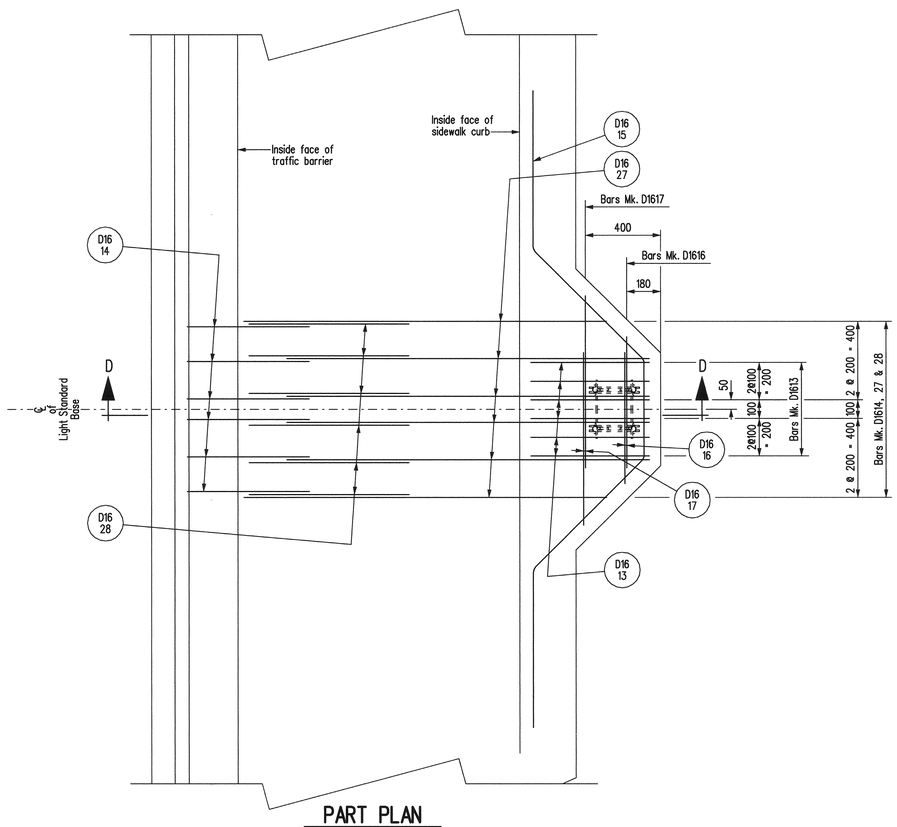

PART PLAN

Showing additional reinforcing bars required at lamp standards.
Sidewalk, barrier and deck reinforcing not shown.
MTS and electrical conduits not shown.
Scale 1 : 15

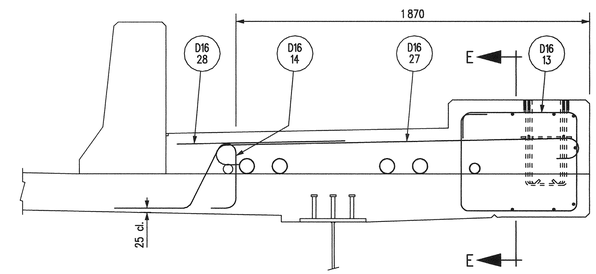

SECTION D-D

Showing additional reinforcing bars required at lamp standards.
Sidewalk, barrier and deck reinforcing not shown.
Scale 1 : 15

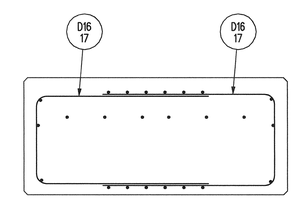

SECTION E-E

Showing additional reinforcing bars required at lamp standards.
Sidewalk, barrier and deck reinforcing not shown.
Scale 1 : 15

NOTES:

1. 60 cl. cover to reinforcing unless noted otherwise.
2. For locations of SECTION A-A see Sheets No.66

REVISIONS		
DATE	BY	DESCRIPTION

PROVINCE OF MANITOBA
Mar. 15/10
S.S RIHAL
REGISTERED PROFESSIONAL ENGINEER

DECK REPLACEMENT - STAGE 1 - REINFORCING DETAILS

RECONSTRUCTION AND STRENGTHENING OF EXISTING BRIDGE
OVER ASSINIBOINE RIVER - CONTRACT THREE
ON P.T.H. No. 100 IN R.L.'S 72, 73 & 94
PARISH OF ST. CHARLES

CITY OF WINNIPEG

Manitoba
Infrastructure and Transportation
Water Control & Structures

DESIGN	BY: M.B.C.	
	CHECKED: S.S.R.	
DETAILS	BY: D.P.W.	
	CHECKED: S.S.R./J.J.	

RELEASED FOR CONSTRUCTION
BY:
Ruth Soden March 15/10
DIRECTOR — DATE
STRUCTURES DESIGN AND CONSTRUCTION BRANCH

SCALE: As Shown
SHEET No. 74
SITE No. 2924-00

...\292400_Deck Reinforcing_Contract 3.dgn 2010-03-10 9:55:58 AM