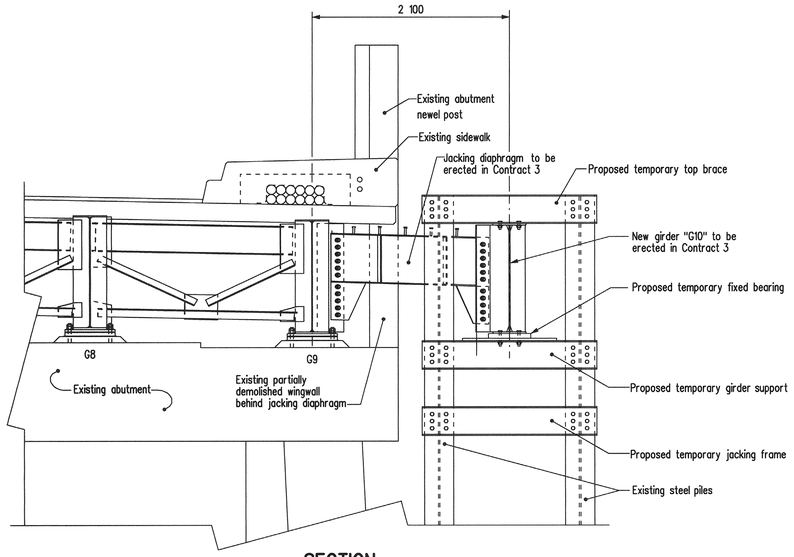

SECTION

Showing new girder "G10" temporary support details at North abutment. South abutment similar.

NOTES:

1. The details shown for the temporary abutment girder supports are conceptual only. The Contractor is responsible for the design of the temporary abutment supports.
2. The Contractor may employ used material for the temporary supports provided that it is in acceptable condition and approved by the Engineer. Structural bolts shall be new.
3. The temporary supports shall be removed by the Contractor when no longer required. Steel piles to be cut off at an elevation 1.0 m below final grade.
4. Steel piles shall be fitted with approved driving tips. Piles shall be driven to refusal.
5. The temporary abutment supports shall be designed to permit elevation adjustment of the erected girder to maintain proper alignment.
6. Modification of the new or existing girders for the temporary supports requires the approval of the Engineer.
7. The temporary abutment girder supports may be oriented on a skew at the Contractor's option.
8. The Contractor shall provide a satisfactory means of restraining the end spans from moving longitudinally after girder erection.

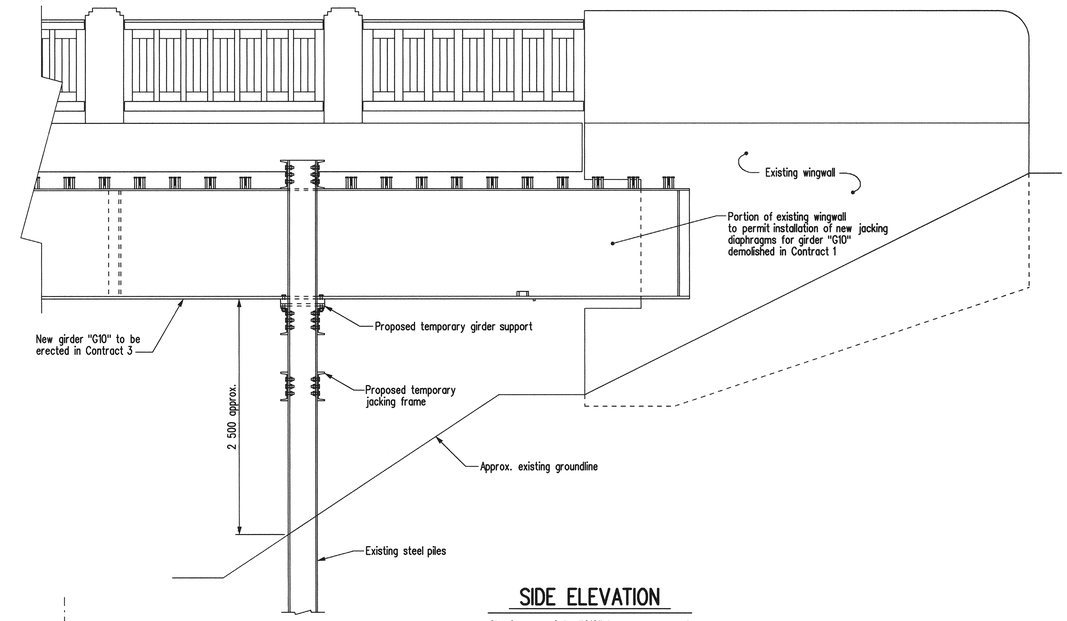

SIDE ELEVATION

Showing new girder "G10" temporary support at North abutment. South abutment similar.

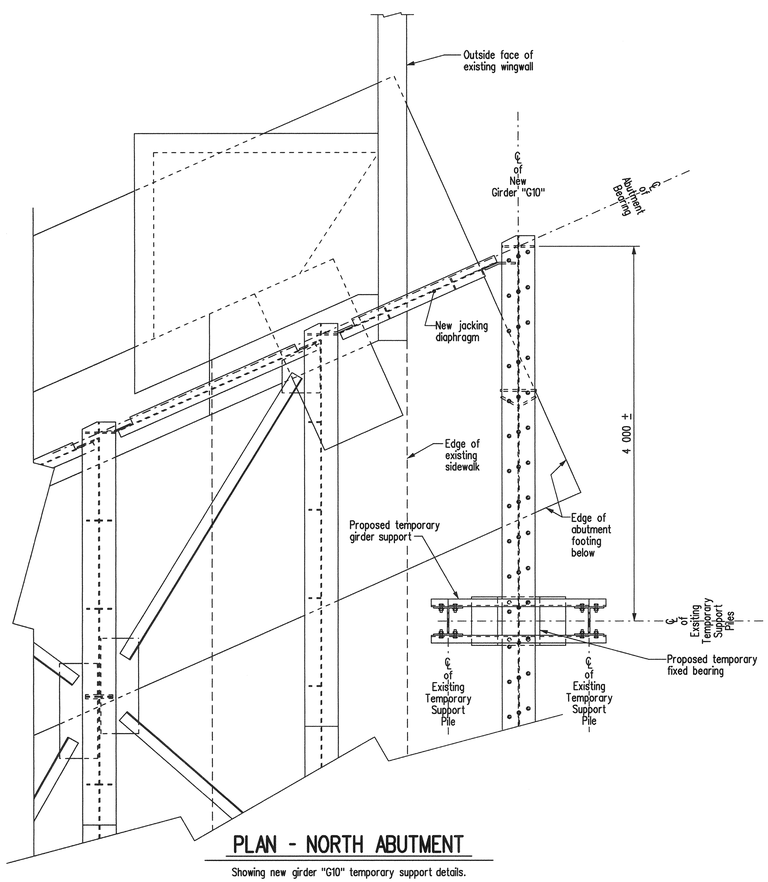

PLAN - NORTH ABUTMENT

Showing new girder "G10" temporary support details.

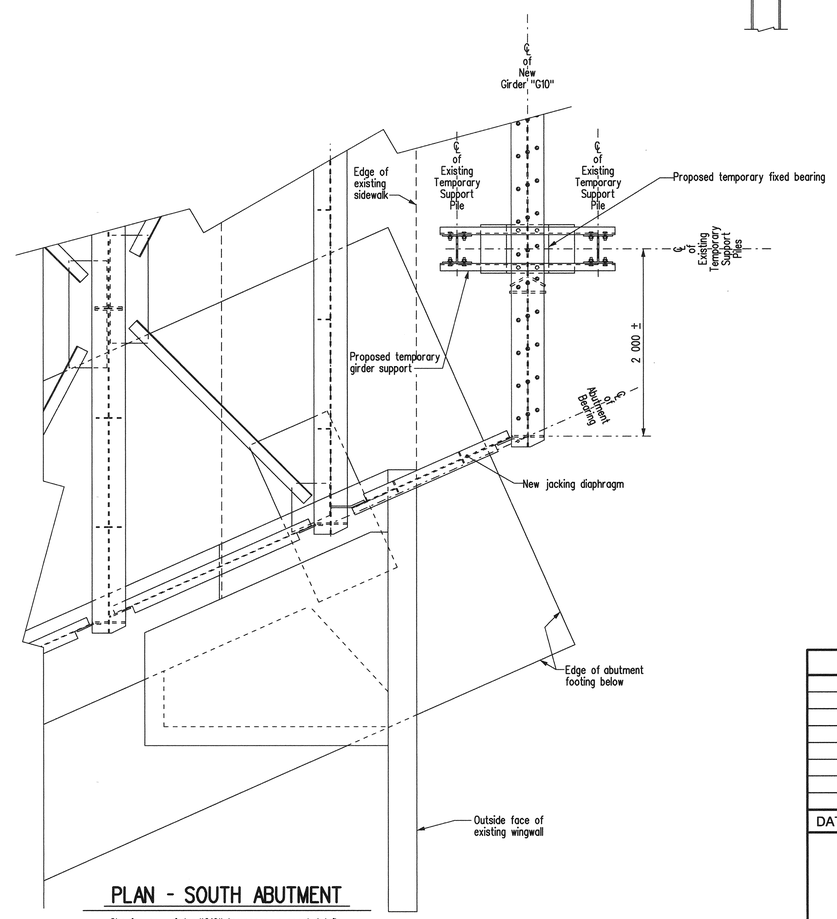

PLAN - SOUTH ABUTMENT

Showing new girder "G10" temporary support details.

REVISIONS		
DATE	BY	DESCRIPTION

PROVINCE OF MANITOBA
Mar. 18/10
S.S RIHAL
REGISTERED PROFESSIONAL ENGINEER

GIRDER TEMPORARY SUPPORT DETAILS

RECONSTRUCTION AND STRENGTHENING OF EXISTING BRIDGE
OVER ASSINIBOINE RIVER - CONTRACT THREE
ON P.T.H. No. 100 IN R.L.'S 72, 73 & 94
PARISH OF ST. CHARLES

CITY OF WINNIPEG

Manitoba Infrastructure and Transportation
Water Control & Structures

RELEASED FOR CONSTRUCTION BY:
Ruth Jeden March 18/10
DIRECTOR DATE
STRUCTURES DESIGN AND CONSTRUCTION BRANCH

DESIGN	BY: M.B.C.	SCALE: 1:30
	CHECKED: M.W.H.	SHEET No. 46
DETAILS	BY: D.P.W.	
	CHECKED: S.S.R./J.J.	SITE No. 2924-00

..\292400_Temp girder support.dgn 2010-03-09 1:52:23 PM