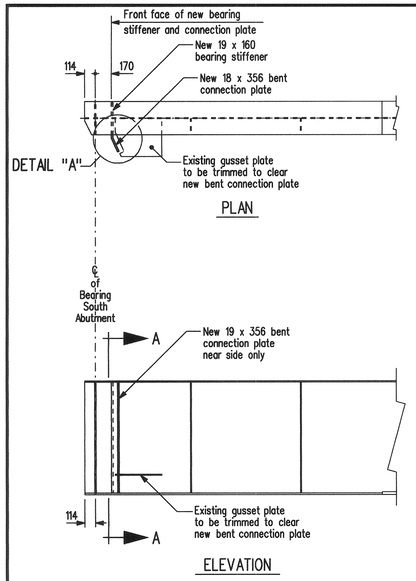

SOUTH ABUTMENT

Showing proposed modifications to existing girder Mk. "G1".

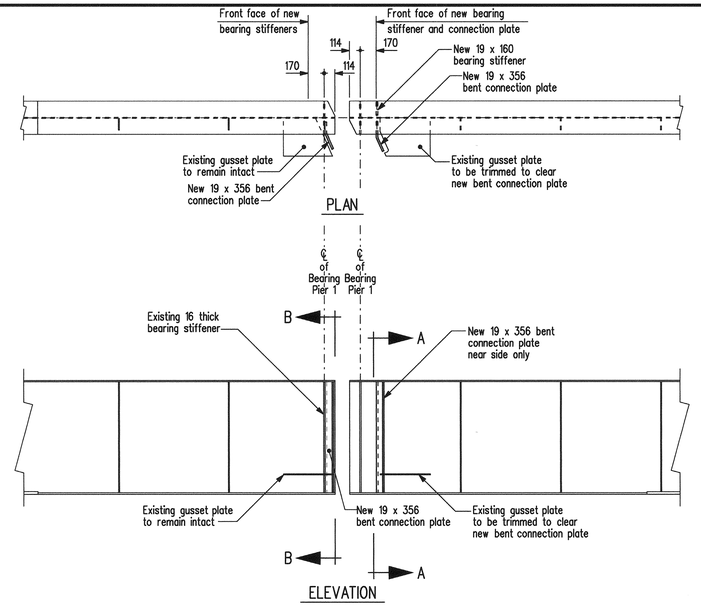

PIER 1

Showing proposed modifications to existing girder Mk. "G1".

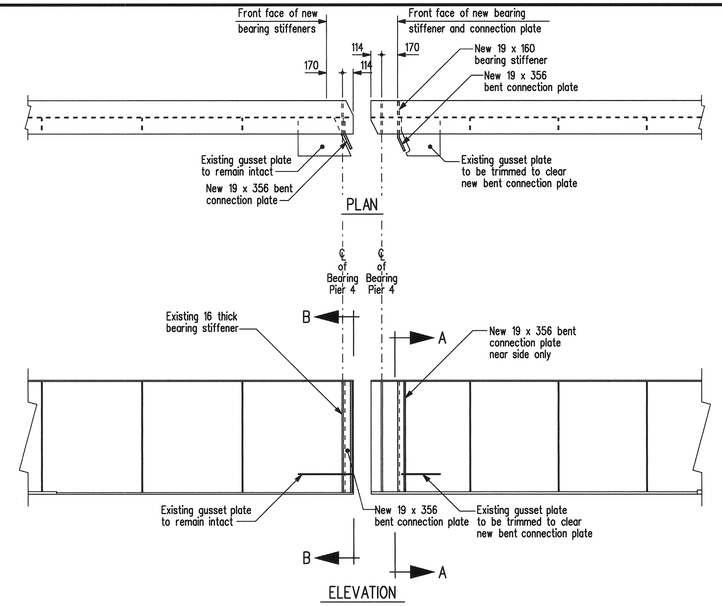

PIER 4

Showing proposed modifications to existing girder Mk. "G1".

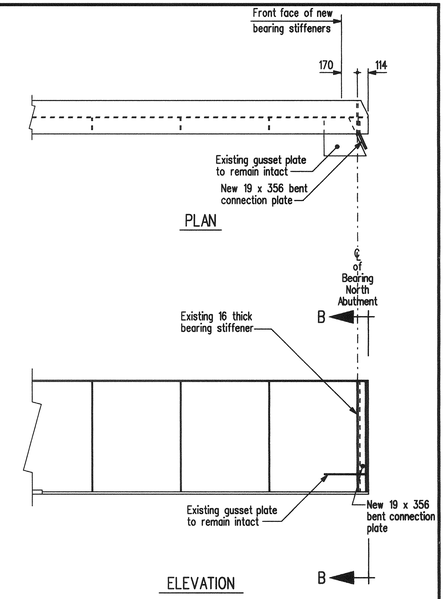

NORTH ABUTMENT

Showing proposed modifications to existing girder Mk. "G1".

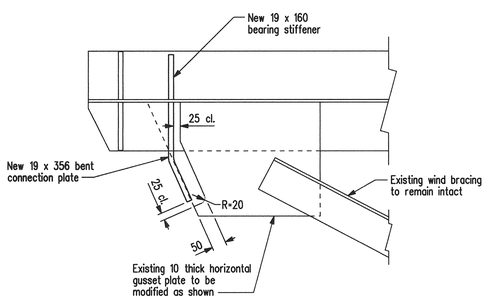

DETAIL "A"

Showing modifications to existing horizontal gusset plate at girder "G1" jacking diaphragms.
Scale 1 : 10

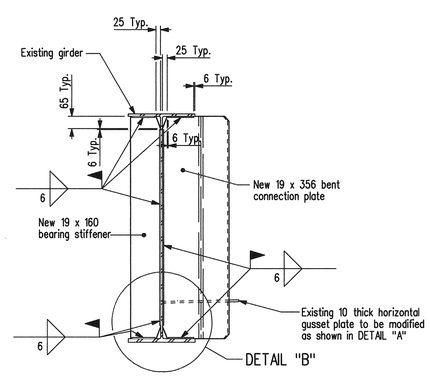

SECTION A-A

Showing new bent connection plate and bearing stiffener to be added to existing girder G1 at North abutment & Piers 1 & 4.
Scale 1 : 15

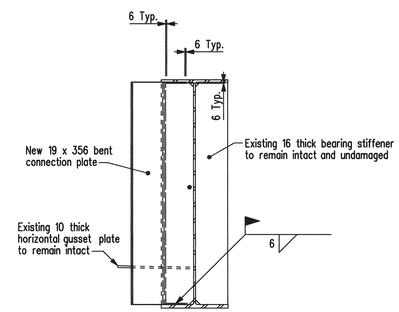

SECTION B-B

Showing 19 x 356 bent connection plate to be added to existing bearing stiffener at girder G1 at Piers 1 & 4 & North abutment.
Scale 1 : 15

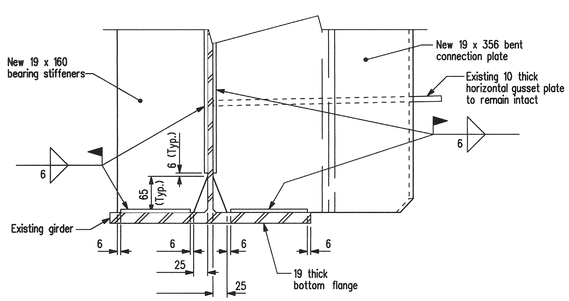

DETAIL "B"

Showing standard clip and weld terminations.
Scale 1 : 5

REVISIONS		
DATE	BY	DESCRIPTION

PROVINCE OF MANITOBA
Mar. 15/10
S.S RIHAL
REGISTERED PROFESSIONAL ENGINEER

GIRDER G1 MODIFICATION DETAILS

RECONSTRUCTION AND STRENGTHENING OF EXISTING BRIDGE
OVER ASSINIBOINE RIVER - CONTRACT THREE
ON P.T.H. No. 100 IN R.L.'S 72, 73 & 94
PARISH OF ST. CHARLES

CITY OF WINNIPEG

Manitoba
Infrastructure and Transportation
Water Control & Structures

RELEASED FOR CONSTRUCTION
BY: Ruth Eden March 15/10
DIRECTOR DATE
STRUCTURES, DESIGN AND CONSTRUCTION BRANCH

DESIGN	BY: M.B.C.	SCALE: 1:30 or As Shown	SHEET No. 50
	CHECKED: S.S.R.		
DETAILS	BY: D.P.W.		SITE No. 2924-00
	CHECKED: S.S.R./J.J.		

...\292400contract3rehab.dgn 2010-03-10 7:23:07 AM